SERVICE PARTS LIST

BULLETIN NO.
54-16-4093

SPECIFY CATALOG NO. AND SERIAL NO. WHEN ORDERING PARTS			REVISED BULLETIN	DATE
DYMODRILL with INTERNAL CLUTCH			54-16-4092	Jan. 2014
CATALOG NO.	**4096**	STARTING SERIAL NO. **798C**	WIRING INSTRUCTION **58-01-0930**	

00 | 0 **EXAMPLE:** Component Parts (Small #) Are Included When Ordering The Assembly (Large #).

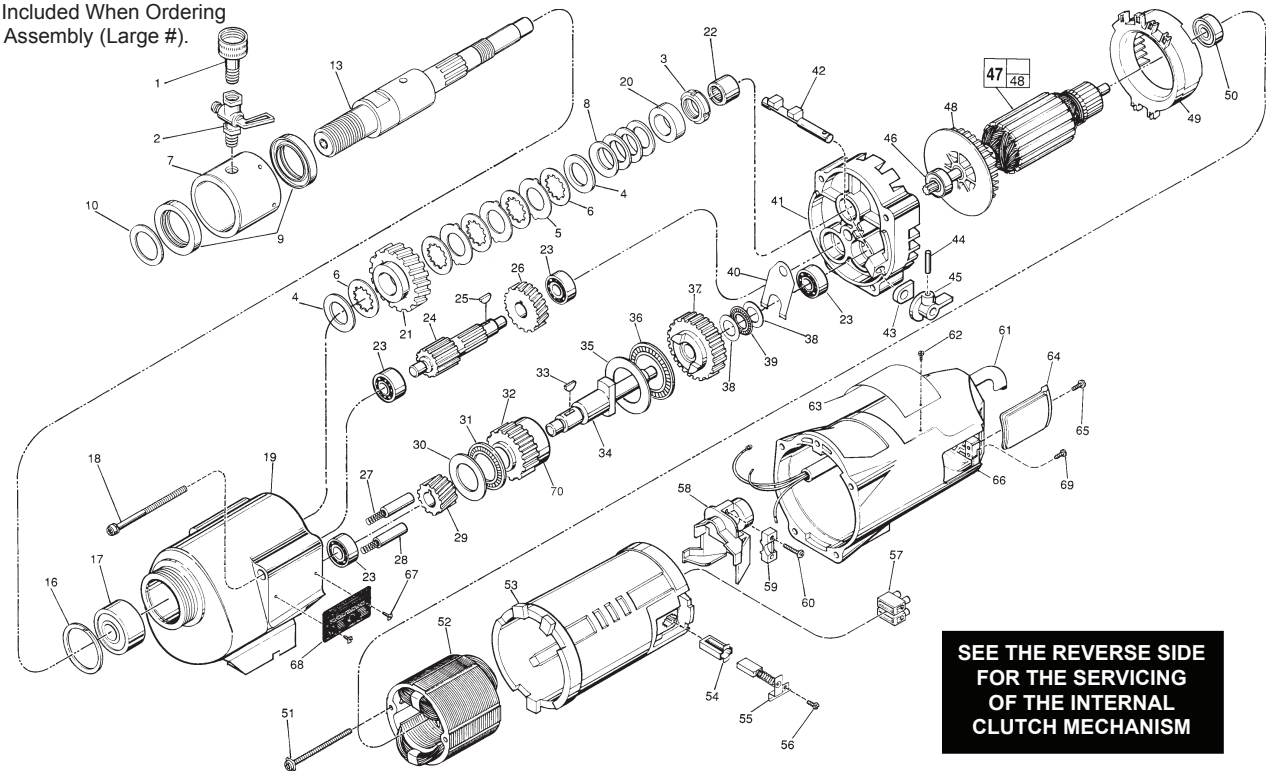

SEE THE REVERSE SIDE FOR THE SERVICING OF THE INTERNAL CLUTCH MECHANISM

FIG.	PART NO.	DESCRIPTION OF PART	NO. REQ.
1	42-04-0600	Water Hose Adapter	(1)
2	45-80-0060	Shut Off Valve	(1)
3	06-57-1050	Retaining Nut	(1)
4	45-88-1140	Thrust Washer	(2)
5	43-06-0160	Clutch Disc-Outer	(3)
6	43-06-0150	Clutch Disc-Inner	(5)
7	43-76-0051	Water Swivel Hsg Incl 06-83-2430 Scr	(1)
8	40-50-2150	Disc Spring	(4)
9	45-06-0635	Seal	(2)
10	45-88-8565	Washer	(1)
13	38-50-6020	Spindle	(1)
16	34-80-3800	Retaining Ring	(1)
17	02-20-2515	Ball Bearing	(1)
18	06-82-9202	1/4-20 x 4-1/4" Taptite T-30	(4)
19	28-14-1870	Gear Case Assy Incl 06-65-1535 Pin	(1)
20	45-36-1520	Spindle Spacer	(1)
21	32-75-3420	Spindle Gear	(1)
22	02-50-4830	Needle Bearing	(1)
23	02-04-1205	Ball Bearing	(4)
24	36-66-3751	Pinion Shaft Assy.	(1)
25	06-42-1600	Woodruff Key	(1)
26	32-40-1581	Intermediate Gear	(1)
27	40-50-6300	Shifting Spring	(2)
28	44-70-0100	Shifting Plunger	(2)
29	32-60-1041	Pinion Gear	(1)
30	45-88-0520	Thrust Bearing Washer	(1)
31	02-80-1800	Thrust Bearing	(1)
★ 32	32-10-0060	Clutch Gear Assembly	(1)
33	06-42-2000	Woodruff Key	(1)
34	36-14-0061	Clutch Shaft	(1)
35	45-88-0530	Thrust Bearing Washer	(1)
36	02-80-5000	Thrust Bearing	(1)
37	32-10-0051	Clutch Gear Assembly	(1)
38	45-88-0510	Thrust Bearing Washer	(2)
39	02-80-1200	Thrust Bearing	(1)
40	45-98-0090	Shifting Yoke	(1)
41	14-13-0210	Diaphragm Assy.(Inc. 06-65-1155 Pin)	(1)
42	30-15-0272	Shift Cam	(1)
★ 43	43-44-0580	Foam Gasket	(2)
44	06-65-0840	1/8 x 3/4" Groove Pin	(1)
45	25-60-0056	Shifting Knob	(1)
46	02-04-1229	Ball Bearing	(1)
47	16-70-0320	120 V Armature	(1)

FIG.	PART NO.	DESCRIPTION OF PART	NO. REQ.
48	22-84-0790	Fan	(1)
49	42-14-0291	Baffle	(1)
50	02-04-1041	Ball Bearing	(1)
51	06-82-9152	10-24 x 2-3/4" Pan Hd. Sem. T-25	(2)
52	18-70-0290	120 V. Field	(1)
53	23-16-1410	Motor Insulator	(1)
54	22-20-0680	Brush Tube	(2)
55	22-18-0702	Carbon Brush Assembly	(2)
56	06-82-8835	8-32 x 5/16" Pan Hd. Sem.T-20	(2)
57	22-56-0470	Terminal Block	(1)
58	22-38-0140	Wire Trap	(1)
59	31-17-0200	Cord Clamp	(1)
60	06-82-7326	8-16 x 1" Pan Hd. Plastite T-20	(2)
★ 61	22-64-0300	Cord Set	(1)
62	06-72-1720	Service Rivet	(2)
63	12-99-1875	Service Nameplate	(1)
64	22-32-0350	Brush Cover	(2)
65	06-82-5316	8-32 x 1/2" Pan Hd. Slt. Taptite T-20	(2)
66	28-50-6363	Motor Housing	(1)
67	06-82-5266	4-40 x 1/4" Pan Hd. TaptiteT-10	(2)
68	12-98-2100	Instruction Plate	(1)
69	06-95-5200	8-32 x 5/16" Slotted Hex Hd. Screw	(1)
★ 70	45-36-0225	Gear Spacer	(1)
	49-96-4700	1-3/8" Open End Wrench	(1)
	45-88-0800	Water Hose Washer(For Fig. No. 1)	(1)
	61-10-0660	Retaining Nut Spanner Tool	(1)
	61-30-0061	Water Seal Jig	(1)

FOR MOUNTING DRILL MOTOR USE:

06-75-3090	1/4-20 x 7/8" Socket Hd. Screw	(4)
06-97-4050	1/4" Split Ring Lock Washer	(4)

FIG.	LUBRICATION
19	18 Oz. Type "J" Grease, No. 49-08-4220.

MILWAUKEE ELECTRIC TOOL CORPORATION
13135 W. LISBON RD., BROOKFIELD, WI 53005

Drwg. 5