SERVICE PARTS LIST

BULLETIN NO.
54-40-7571

SPECIFY CATALOG NO. AND SERIAL NO. WHEN ORDERING PARTS				REVISED BULLETIN	DATE
1-1/4" STROKE SAWZALL®				54-40-7570	Oct. 2013
CATALOG NO.	**6538-21**	STARTING SERIAL NO.	**B36B**	WIRING INSTRUCTION **See Page 3**	

EXAMPLE:
Component Parts (Small #) Are Included When Ordering The Assembly (Large #).

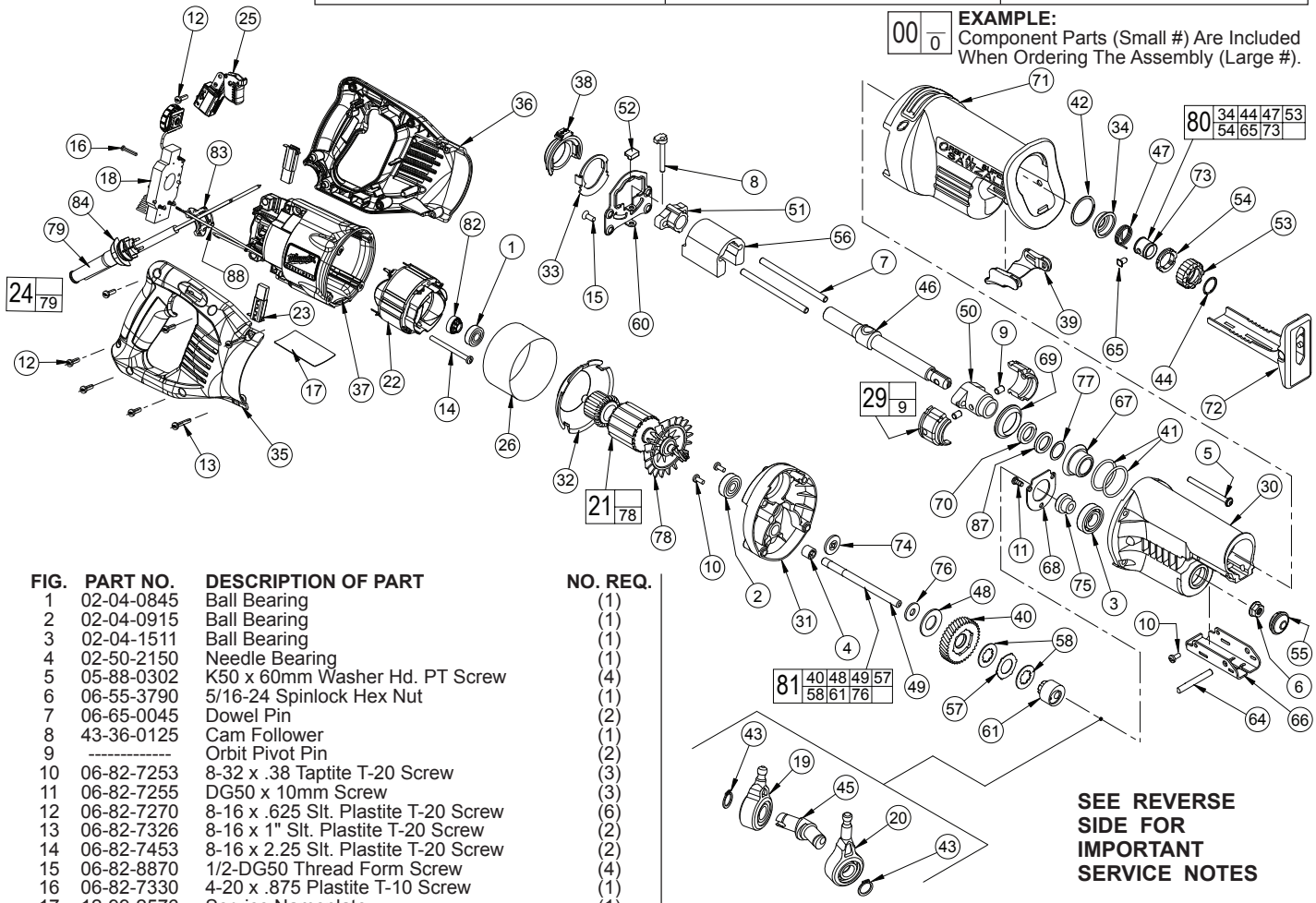

FIG.	PART NO.	DESCRIPTION OF PART	NO. REQ.
1	02-04-0845	Ball Bearing	(1)
2	02-04-0915	Ball Bearing	(1)
3	02-04-1511	Ball Bearing	(1)
4	02-50-2150	Needle Bearing	(1)
5	05-88-0302	K50 x 60mm Washer Hd. PT Screw	(4)
6	06-55-3790	5/16-24 Spinlock Hex Nut	(1)
7	06-65-0045	Dowel Pin	(2)
8	43-36-0125	Cam Follower	(1)
9	----------	Orbit Pivot Pin	(2)
10	06-82-7253	8-32 x .38 Taptite T-20 Screw	(3)
11	06-82-7255	DG50 x 10mm Screw	(3)
12	06-82-7270	8-16 x .625 Slt. Plastite T-20 Screw	(6)
13	06-82-7326	8-16 x 1" Slt. Plastite T-20 Screw	(2)
14	06-82-7453	8-16 x 2.25 Slt. Plastite T-20 Screw	(2)
15	06-82-8870	1/2-DG50 Thread Form Screw	(4)
16	06-82-7330	4-20 x .875 Plastite T-10 Screw	(1)
17	12-99-2576	Service Nameplate	(1)
★18	14-20-1115	Remote Electronics Assembly	(1)
19	14-67-0126	Secondary Wobble Plate Assembly	(1)
20	14-67-0136	Primary Wobble Plate Assembly	(1)
21	16-30-0705	Service Armature	(1)
22	18-31-0220	Service Field	(1)
23	22-20-0535	Carbon Brush Assembly	(2)
24	22-64-0595	Cord Assembly	(1)
25	23-66-2490	Switch	(1)
26	23-16-0045	Cardboard Tube	(1)
29	14-30-0080	Orbit Pocket Assembly	(2)
30	28-14-2600	Gearcase	(1)
31	28-28-2600	Diaphragm	(1)
32	31-05-0155	Baffle	(1)
33	31-11-0130	Orbital Cam Plate	(1)
34	31-15-0170	Spring Cover	(1)
35	31-44-2090	Handle Half - Right	(1)
36	31-44-2095	Handle Half - Left	(1)
37	31-50-1990	Motor Housing	(1)
38	31-52-0045	Orbit Shift Lever	(1)
39	31-52-0090	Shoe Release Lever	(1)
40	32-40-2050	Intermediate Gear	(1)
41	34-40-0040	O-Ring	(2)
42	34-60-0125	Retaining Ring	(1)
43	34-60-1315	External Retaining Ring	(2)
44	34-60-3700	Retaining Ring	(1)
45	36-92-0701	Wobble Shaft	(1)
46	38-50-6400	Reciprocating Spindle	(1)
47	40-50-0162	Torsion Spring	(1)
48	40-50-8850	Disc Spring	(1)
49	42-12-0190	Wobble Shaft Axle	(1)
50	42-24-0066	Front Spindle Bushing	(1)
51	42-24-0525	Rear Spindle Bushing	(1)
52	42-38-0055	Orbit Bumper	(1)
53	42-50-0355	Front Cam	(1)
54	42-50-0360	Rear Cam	(1)
55	42-52-0380	Bearing Cap	(1)

SEE REVERSE SIDE FOR IMPORTANT SERVICE NOTES

FIG.	PART NO.	DESCRIPTION OF PART	NO. REQ.
56	42-87-0180	Counter Weight	(1)
57	43-06-0676	Bronze Plate	(1)
58	43-06-0685	Metal Plate	(2)
60	43-56-0620	Orbit Plate	(1)
61	43-78-0575	Orbit Drive Hub	(1)
64	44-60-1635	Shoe Pin	(1)
65	44-60-1750	Lock Pin	(1)
66	44-66-0880	Shoe Retainer	(1)
67	44-86-0035	Front Orbit Cap	(1)
68	44-86-0655	Bearing Retainer	(1)
69	45-06-0110	Orbit Seal	(1)
70	45-06-0475	Polypak Seal	(1)
71	45-12-0700	Gearcase Insulator	(1)
72	45-16-0645	Shoe Assembly	(1)
73	45-22-0175	Sleeve	(1)
74	45-28-0555	Slinger	(1)
75	45-36-1445	Spacer	(1)
76	45-88-1555	Washer	(1)
77	45-88-8577	Washer	(1)
78	22-84-0531	Fan	(1)
79	44-76-0210	Cord Protector	(1)
80	14-46-1060	Large Quik-Lok Blade Clamp	(1)
81	14-08-0075	Gear Protecting Clutch Assembly	(1)
82	23-38-0200	Magnet	(1)
83	31-17-0260	Cord Clamp	(1)
84	31-17-0265	Cord Clamp	(1)
87	45-06-0501	Felt Seal	(1)
88	23-94-7425	Leadwire Assembly	(1)
★89	23-48-6538	Fiberglass Sleeve	(2)
	42-55-2051	Carrying Case (Not Shown)	(1)

MILWAUKEE ELECTRIC TOOL CORPORATION
13135 W. LISBON RD., BROOKFIELD, WI 53005

Drwg. 2